PRESIDENT'S OFFICE

REGIONAL ADMINISTRATION

AND LOCAL GOVERNMENT

FORM FOUR MOCK EXAMINATIONS

MAY 2024

031/~~01~~ PHYSICS

MARKING GUIDE

SECTION A (16 MARKS)

1

i	ii	iii	iv	v	vi	vii	viii	ix	x
C	B	A	C	D	D	A	D	A	E

10 @ 1

2.

i	ii	iii	iv	v	vi
B	D	C	E	A	H

06 @ 1

3. (a) In order to determine the Relative density of oil, the following procedures can be used.

(i) Measure the mass of dry and empty density bottle (m_0)

(ii) Fill the bottle with the liquid and dry it with blotting paper, then measure its mass (m_1)

(iii) Empty the bottle and rinse it with water.

(iv) Finaly fill the bottle with water and find its mass (m_2)

3 @ ½

1

DIAGRAM.

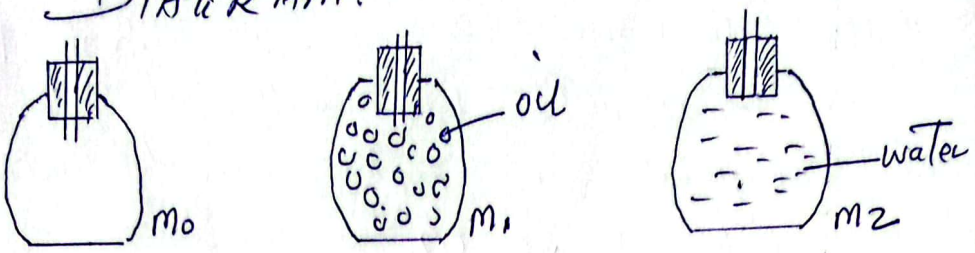

Mass of oil $= (m_1 - m_0)g$

Mass of an equal volume of water $= (m_2 - m_0)g$

Relative density (R.D) $=$ $\frac{\text{Mass of oil}}{\text{Mass of water}}$ 1½

$$R.D = \frac{m_1 - m_0}{m_2 - m_0}.$$

(b) The problem is long-sightedness (hyper-metropia). This occurs when a person can not see near objects clearly but can see distant objects clearly. The cause is when the eyeball is too short and when the ciliary muscles are weak such that unable to change the shape of eyelens in order to focus the image 03

Correction

The defect can be corrected by wearing suitable convex lenses so that the rays from near objects are made to converge and focus on the retina. 01

(c) In the morning it is very cold which make metal to contract and bicome harder to looses wheel nuts. But • In hot day the metal expand and Make easier to unscrew the wheel nuts ... 02

4. (a) i) This because the earth behaves like largest magnet with its North pole pointing near the South Geographic pole (SGP) and its south pole near the North Geographic pole (NGP). So the North pole of a suspended magnet turns toward North Geographic pole (NGP) and the south pole of a magnet will points South Geographic pole (SGP) ~~02~~ 01½

• The Device is Compass Needle. 01½

ii)

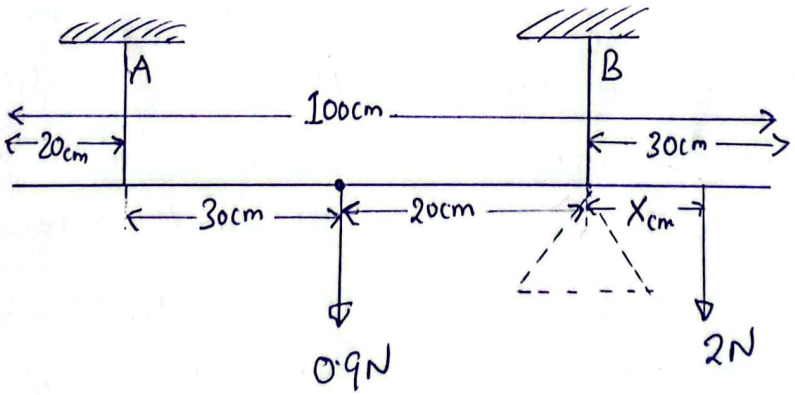

From the above diagram

Sum of clockwise moment = Sum of anticlockwise 03

$(2 \times x) = 0.9 \times 20$

$\frac{2x}{2} = \frac{18}{2}$ $\quad X = 9\text{cm}$

∴ distance from the centre = 9cm + 20cm = 29cm 2

b) i) Our ear pop when going on mountain b/ce the air pressure outside of your body changes as altitude changes. Yawning opens the eustachian tube and allows the middle ear to get more air, equalizing the air pressure. 02

ii) Data

Depth (h) = 20m

$P_{atm} = 1.03 \times 10^5$ Pa

Density of water = 1000 kg/m^3

Gravitational force (g) = 10N/kg.

Pressure (P) = $h\rho g$

Pressure total (P_T) = $\rho h g + P_{atm}$

$= 1000 \times 20 \times 10 + 1.03 \times 10^5$

or $1000 \times 20 \times 9.8 + 1.03 \times 10^5$

Pressure exerted on the diver = 3.03×10^5 Pa or 2.99×10^5 Pa 02

5 (a) From $F_{net} = Ma$

Explanations

This increase time of impact by Reading Force

$F_{net} = \frac{M(v-u)}{t}$

$F \times t = M(v-u)$

or

$F \times t = Mv - Mu$

Impulse. Change in momentum

02 ~~02~~ ~~03~~ 3

(b) Data $f = 120N \quad a = 0.0003\ m^2$

$A = 2cm^2 = 0.0002M^2$

Req F.

$f/a = F/A$.

$F = \frac{f \times A}{a}$.

06

$F = \frac{120 \times 0.0003}{0.00012}$

$F = 180N$ for the area of $0.0002m^2$

∴ Thus fine Force of the larger Piston = 180N

Data

6 (a) Voltage (V) = 120V

Mass of H_2O = 550g = 0.55kg.

Initial temperature (θ_i) = 20°C

Final temperature (θ_f) = 100°C.

Time taken (t) = 180sec.

Req: Resistance of the coil $R_c = x$.

Electrical energy supplied = Heat energy gained by water.

$ItV = M_w C_w \Delta\theta$.

$ItV = M_w C_w (\theta_f - \theta_i°)$

but $I = V/R$.

$$\frac{V^2 t}{R} = M_w C_w (\theta_f - \theta_i)$$

$$R = \frac{V^2 t}{MC\Delta\theta}.$$

$$R = \frac{(120)^2 \times 180}{0.55 \times 4200 \times (100-20)}$$

Resistance of the coil is $14\,\Omega$ 04

Assumption is that there is no heat loss to the surrounding all energy supplied by the heater will be gain by the water. 01

(b) Bcz when the current flows in TV and computer monitors they will be charged. And any charged object exerts electrostatic force of attraction towards a neutral object (dusts). 02

(c) Bcz in the space there is no atmosphere this is why it makes it to appear black. 02

4

7 (a) This is bla H2O is much denser than air which provides greater buoyant force that support the weight of the cargo making it easier to lift the cargo. 02

(b)

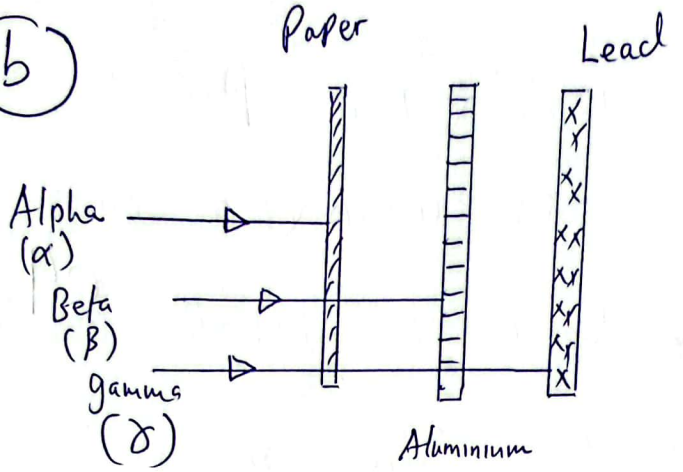

03

(c) Data

$t_{1/2} = 10 min$ $F = x$ $N_0 = 100\%$

$N_n = 100\% - 90\% = 10\%$.

$\frac{N_n}{N_0} = \left(\frac{1}{2}\right)^n$.

$\frac{10}{100} = \left(\frac{1}{2}\right)^n$

$\log 0.1 = n \log 0.5$

$n = 3.3$

$t = n t_{1/2}$ $t = 3.3 \times 10 min$

$t = 33 \text{ minutes}$

The time taken is 33 minutes. 04

8 (a) This is bcz radio waves have a long wavelength so they can diffract easily round the hill but TV waves have very short wavelength so cannot diffract around the hills 04

(b) From principle of conservation of momentum.

$m_1u_1 + m_2u_2 = (m_1 + m_2)v_c$

but $m_1 = m_2 = m$

$mu + 0 = (m+m)v_c$ bcz one trolley is at rest

$mu = (m+m)v_c$

$mu = 2mv_c$

$v_c = u/2$.

$v_c = 20/2$

$v_c = 10 \text{ m/s}$ 05

10 (a)(i) The duck remains floating at the same place because waves do not move the water surface / particles instead they only make them to vibrate up and down about their equilibrium positions 04

(ii) → By changing the length of the wire

→ By changing the Tension of the wire. 03 @ 1½

(b) The lamps in a household circuit are connected in parallel because even when one lamp fail the other will keep working. And another reason is so as to provide equal amount of voltage to give the same brightness. 04

(c) Data

Capacitance (C) = 15pF.

P.d (v) = 18 Volts.

Required charge (Q).

$Q = CV$

$Q = 15 \times 10^{-12} \times 18$

$Q = 2.7 \times 10^{-10} C$ 04

---

11 (a) (i) The device is X-Ray tube . 01

ii)

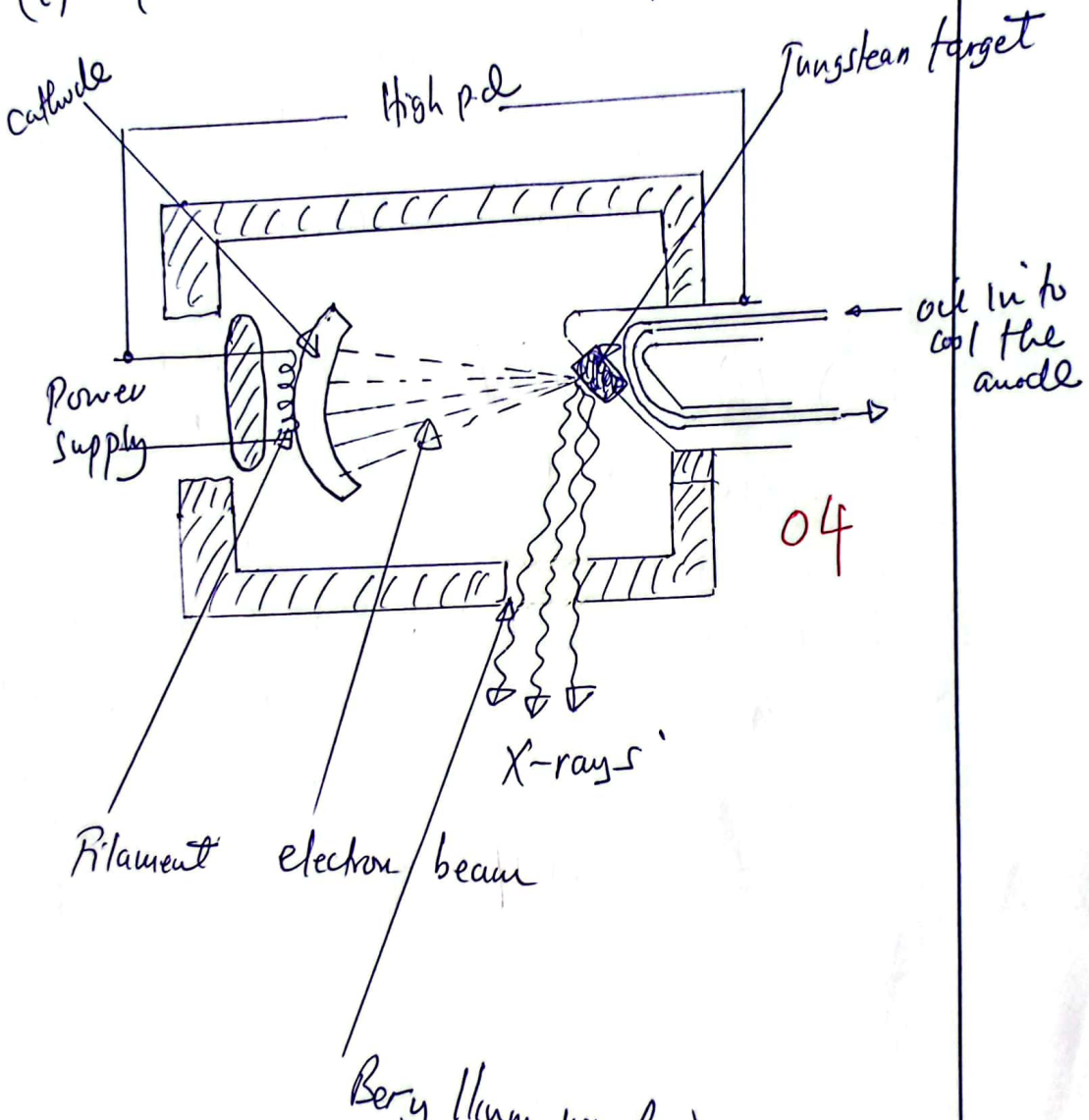

04

How it work.

electrons are emitted from a hot cathode due to thermionic emission. They get accelerated by high voltage to the tungstean target once they hit the tungsten small energy is converted to x-ray an but larger energy is converted to heat energy. 02

11 (b) (i) Major causes of global warming. 01

(a) Green house effect.

(ii) measures that can be taken to control global warming:

(a). Use clean alternative sources of energy 2 @ 1/2

(b) Afforestation – reduced carbondioxide

(c) Reduce use of fossil fuel

(d) Minimizing emission of greenhouse gases into the atmosphere.

(c) Why A.C is used in transimission of power over long distance but not D.C

Reasons! 05

1. A.C is much easier to step up and down is voltage using transformers 7.

11(c) than D.C.

To minimize power loss, power is transfered at High voltage and low current with the help of transformers.